1300 650 090
sales@mrt.com.au

MRT2C

SPEC SHEET

FEATURES

- Weather Resistant Rubber Seals
- Fully Seam Welded
- Strong Lockable T-Locks
- Full Length Piano Type Hinge

SPECIFICATIONS

- 1000mm x 400mm x 200mm
- Heavy Duty 2mm Aluminium
- Includes left and right box

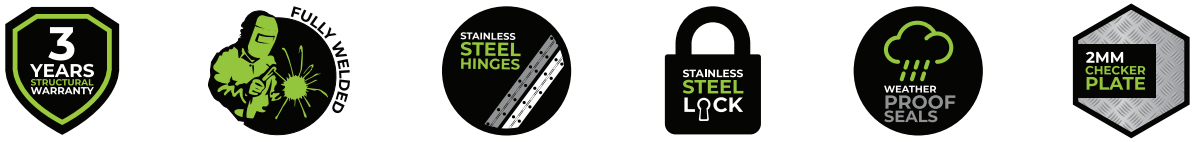

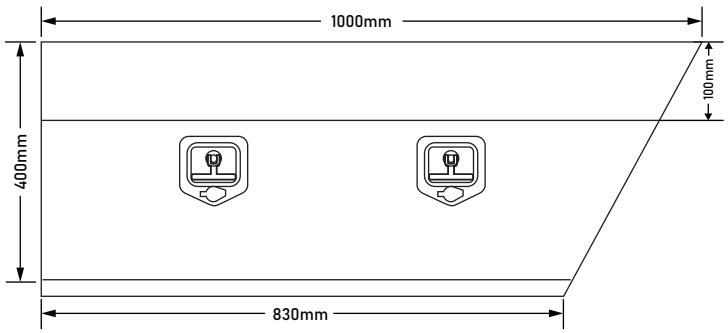

FRONT VIEW

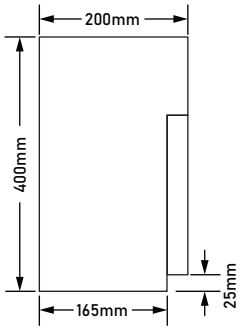

SIDE VIEW

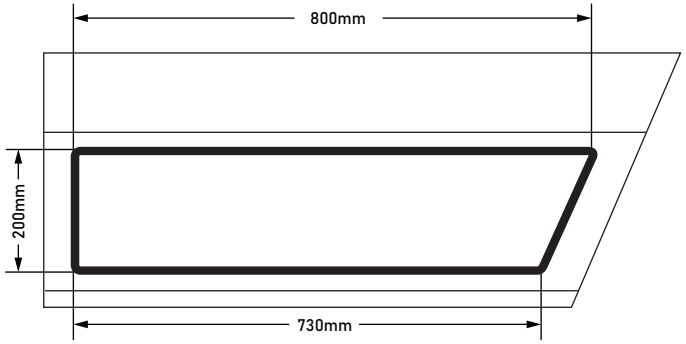

FRONT WITHOUT DOOR

MODEL ID: MRT2C